JAZZ

Siège fixe Diana

DIMENSIONS

Longueur	440 mm
Largeur	355 mm
Hauteur	52 mm

COULEURS ET FINITIONS

01 Blanc Brillant

DESSINS TECHNIQUES

CARACTÉRISTIQUES

Siège fixe

Longueur: 440 mm

Largeur: 355 mm

Hauteur: 52 mm

Ceramics bowl width (mm): 360

DistanceFrontToHoles: 425

Forme: Elongated

Length between the centers of bolts holes (inch): 6,3

Length between the centers of bolts holes (inch): 6 5/16"

Length from the centers of the bolts holes to the front of the bowl (inch): 16,73

Length from the centers of the bolts holes to the front of the bowl (inch): 16 3/4"

LengthBetweenHoles: 160

Poids net / kg: 2,45

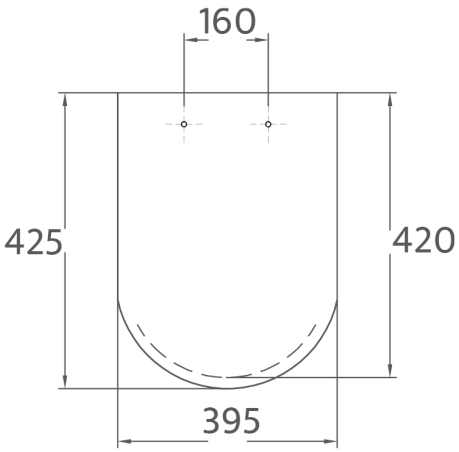

© Copyright 2026, Ceramicas Gala S.A - All rights reserved | 23-11-2026 | http://www.gala.es/produits/siege-fixe-diana-G51234..?sku=G5123401

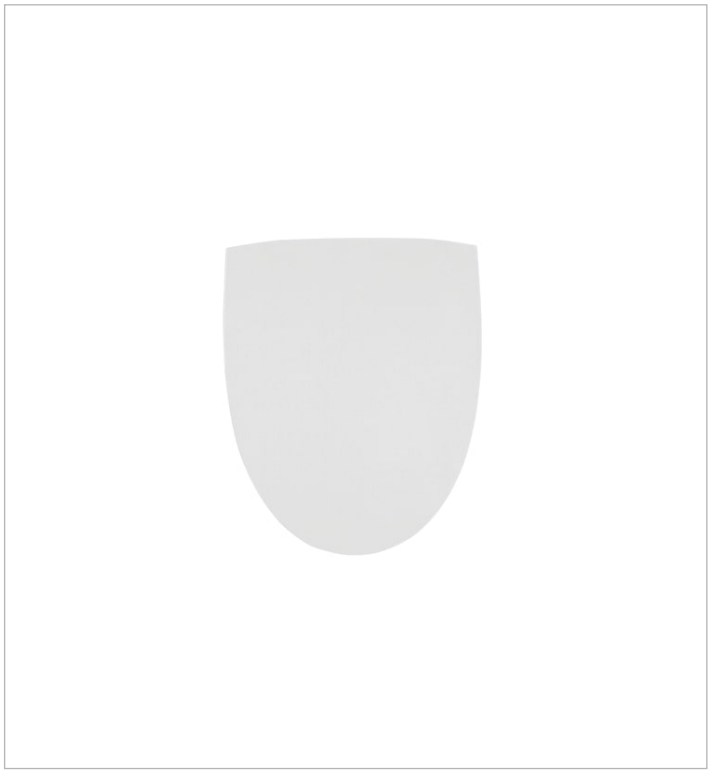

JAZZ
Inodoro + asiento



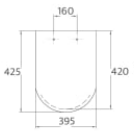

Ref. asiento: G5123401

© Copyright 2026, Ceramicas Gala S.A - All rights reserved | 23-11-2026 | http://www.gala.es/produits/siege-fixe-diana-G51234..?sku=G5123401