

STRIDE

WC Half Frame Stride. Installation system for wall-hung toilet on brick wall. 6/3 litres, 4,5/3 litres and 4/2 litres flush.

TECHNICAL DRAWINGS

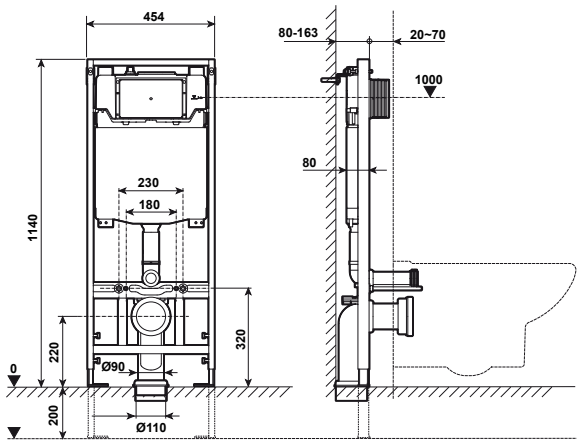

FEATURES

WC Full Frame Stride. Installation system for wall-hung WC in brick wall. 6/3L, 4,5/3L and 4/2L flush. Installation accessories included. Minimum depth: 107/120 mm (DN90/DN100). Waste elbow Ø90 or 110 mm. Only compatible with ST flush plates.

Length: 475 mm

Width: 80 mm

Height: 1140 mm

Adjustable flushing volume: Dual flush 2/4 litres, Dual flush 3/4.5 litres, Dual flush 3/6 litres

Elbow connection: DN100 (110 mm), DN90 (90 mm)

Minimum fixation depth (mm): 107

Net weight (kg): 13,4

Operating plate position: Frontal

Suitable for: Wall-hung toilet

Water inlet position: Top

© Copyright 2026, Ceramicas Gala S.A - All rights reserved | 25-11-2026 | http://www.gala.es/products/wc-half-frame-stride-installation-system-wall-hung-toilet-brick-wall-63litres-4-53litres-42litres-flush-G5548600?sku=G5548600