JAZZ

Jazz fixed seat

DIMENSIONS

Length	440 mm
Width	355 mm
Height	52 mm

COLOURS AND FINISHES

01 White

TECHNICAL DRAWINGS

FEATURES

Fixed Seat

Length: 440 mm

Width: 355 mm

Height: 52 mm

Ceramics bowl width (mm): 360

Length between the centers of bolts holes (inch): 6,3

Length between the centers of bolts holes (inch): 6 5/16"

Length between the centers of bolts holes (mm): 160

Length from the centers of the bolts holes to the front of the bowl (inch): 16,73

Length from the centers of the bolts holes to the front of the bowl (inch): 16 3/4"

Length from the centers of the bolts holes to the front of the bowl (mm): 425

Net weight (kg): 2,45

Shape: Elongated

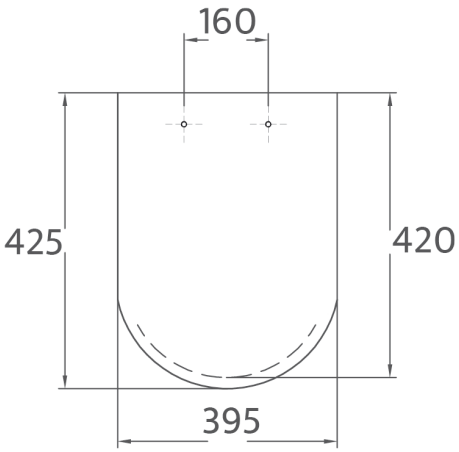

© Copyright 2026, Ceramicas Gala S.A - All rights reserved | 23-11-2026 | http://www.gala.es/products/jazz-fixed-seat-G51234..?sku=G5123401

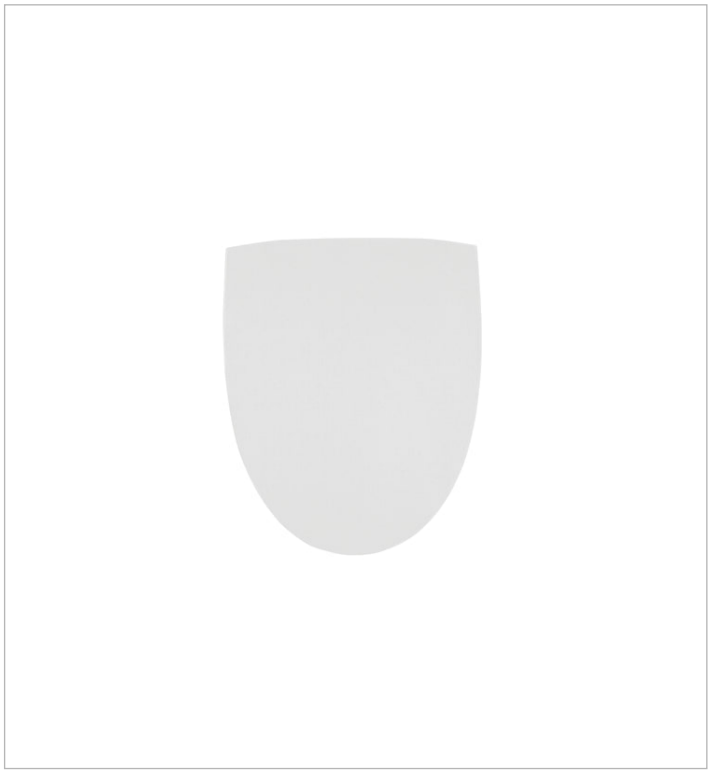

JAZZ
Inodoro + asiento



Ref. asiento: G5123401

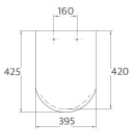

© Copyright 2026, Ceramicas Gala S.A - All rights reserved | 23-11-2026 | http://www.gala.es/products/jazz-fixed-seat-G51234..?sku=G5123401

JAZZ

JAZZ

INSTALLATION AND USER MANUALS

Mounting Instructions - Documents

© Copyright 2026, Ceramicas Gala S.A - All rights reserved | 23-11-2026 | http://www.gala.es/products/jazz-fixed-seat-G51234..?sku=G5123401