

HANNA

Bidet with bolt kit

DIMENSIONS

Length	530 mm
Width	355 mm
Height	400 mm

COLOURS AND FINISHES

01 White

TECHNICAL DRAWINGS

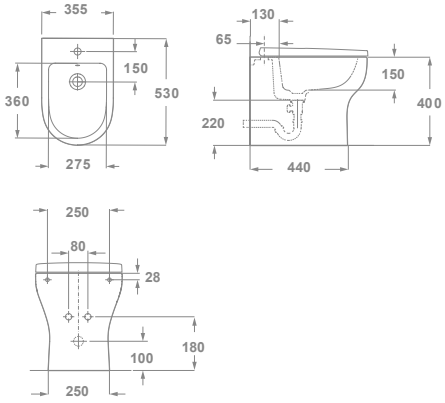

FEATURES

Bidet 53x35,5 cm with bolt kit.

Length: 530 mm

Width: 355 mm

Height: 400 mm

Net weight (kg): 27,5

© Copyright 2026, Ceramicas Gala S.A - All rights reserved | 26-11-2026 | http://www.gala.es/products/bidet-bolt-kit-G43360..?sku=G4336001

HANNA



HANNA

© Copyright 2026, Ceramicas Gala S.A - All rights reserved | 26-11-2026 | http://www.gala.es/products/bidet-bolt-kit-G43360..?sku=G4336001