

IRIA

Bidet with bolt kit

DIMENSIONS

Length	530 mm
Width	355 mm
Height	420 mm

COLOURS AND FINISHES

01 White

TECHNICAL DRAWINGS

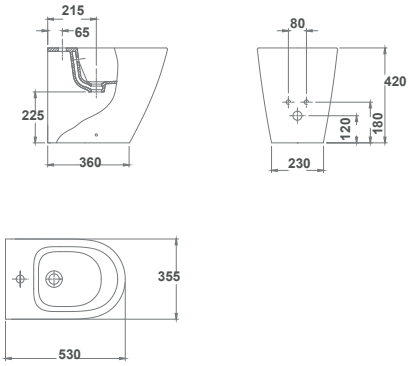

FEATURES

Bidet 53x35,5 cm with bolt kit.

Length: 530 mm

Width: 355 mm

Height: 420 mm

Cover: Cover not included

Fixing kit: Included

Incompatible with cover

Installation type: Floorstanding

Net weight (kg): 26,28

Shape: Round

Taphole configuration: 1 Taphole

Weight (Kg): 25,4

© Copyright 2026, Ceramicas Gala S.A - All rights reserved | 26-11-2026 | http://www.gala.es/products/bidet-bolt-kit-G35360..?sku=G3536001









© Copyright 2026, Ceramicas Gala S.A - All rights reserved | 26-11-2026 | http://www.gala.es/products/bidet-bolt-kit-G35360..?sku=G3536001