gala

REF: G1236001



NOBLE

Bidet with bolt kit

DIMENSIONS

Length	580 mm
Width	360 mm
Height	410 mm

COLOURS AND FINISHES

01 White

TECHNICAL DRAWINGS

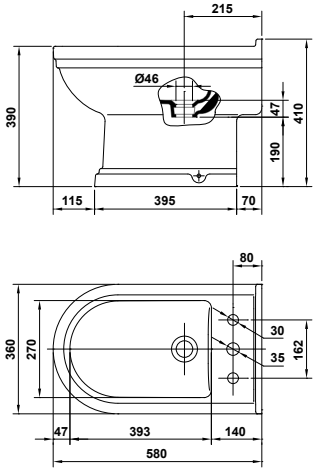

FEATURES

Bidet 58 x 36 cm. with bolt kit.

Length: 580 mm

Width: 360 mm

Height: 410 mm

Cover: Cover not included

Fixing kit: Included

Incompatible with cover

Installation type: Floorstanding

Net weight (kg): 23,35

Shape: Round

Taphole configuration: 1 Taphole

© Copyright 2026, Ceramicas Gala S.A - All rights reserved | 26-11-2026 | http://www.gala.es/products/bidet-bolt-kit-G12360..?sku=G1236001





© Copyright 2026, Ceramicas Gala S.A - All rights reserved | 26-11-2026 | http://www.gala.es/products/bidet-bolt-kit-G12360..?sku=G1236001