

STREET SQUARE

BTW bidet with bolt kit

DIMENSIONS

Length	530 mm
Width	353 mm
Height	400 mm

COLOURS AND FINISHES

01 White

TECHNICAL DRAWINGS

FEATURES

BTW bidet 53x35 with bolting kit.

Length: 530 mm

Width: 353 mm

Height: 400 mm

Back to wall

Cover: Cover not included

Fixing kit: Included

Incompatible with cover

Installation type: Floorstanding

Net weight (kg): 22,15

Shape: Square

Taphole configuration: 1 Taphole

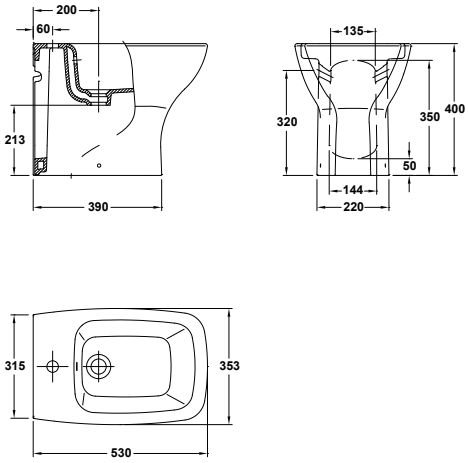

© Copyright 2026, Ceramicas Gala S.A - All rights reserved | 26-11-2026 | http://www.gala.es/products/btw-bidet-bolt-kit-G05366..?sku=G0536601





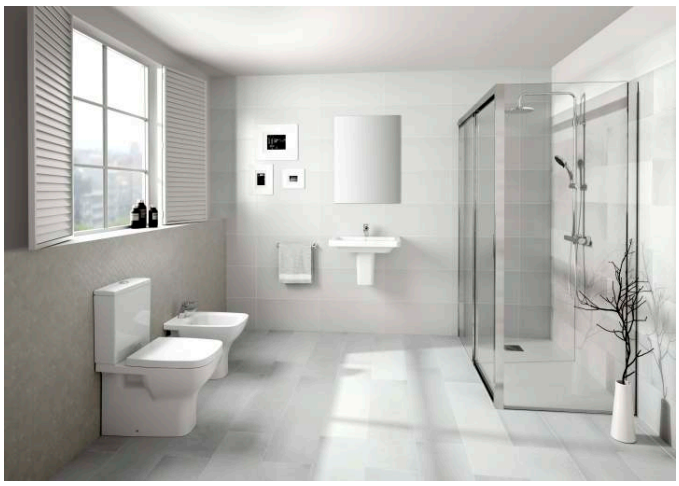

© Copyright 2026, Ceramicas Gala S.A - All rights reserved | 26-11-2026 | http://www.gala.es/products/btw-bidet-bolt-kit-G05366..?sku=G0536601